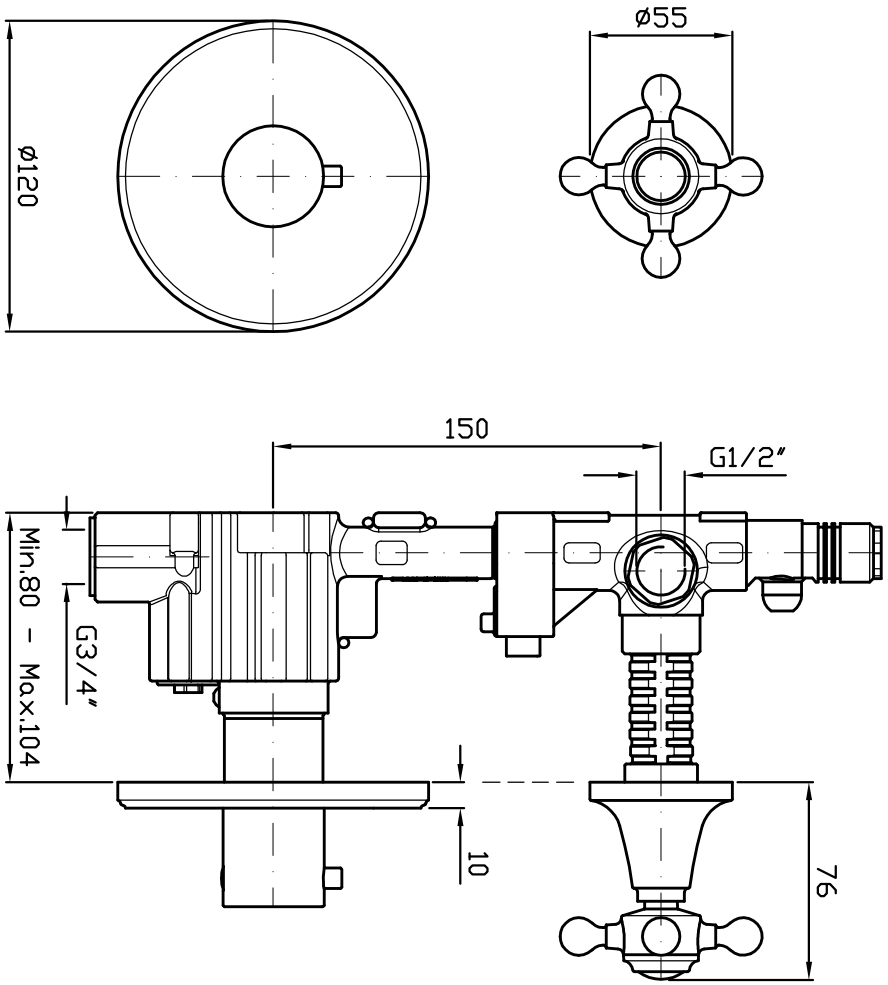

ZUCCHETTI. RUBINETTERIA S.p.A.	Cod. Art. ZAG077+R99630
TERMOSTATICO INCASSO + 1 RUB.	
Rev. 00	Data 28/05/13